CAT-SAC-2009(0)

SARAVEL AIR COOLED CONDENSERS

SARAVEL

NOMENCLATURE

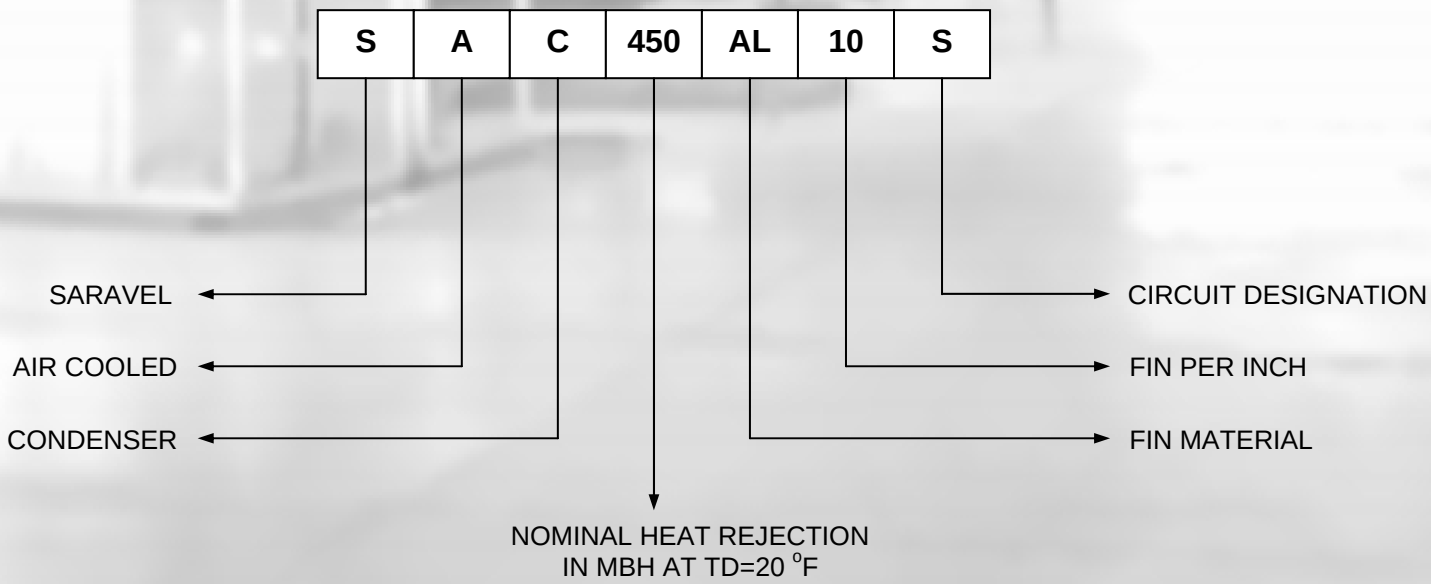

INTRODUCTION

SARAVEL Remote Air Cooled Condensers are available in 12 models in the range of 3 to 100 Tons for air-conditioning and refrigeration applications, and can be configured into a wide range of compressor-evaporator combinations for halocarbon refrigerants. The ease of installation and minimum maintenance makes SARAVEL air-cooled condensers ideal for year round applications in multistory office buildings, hotels, schools and industrial facilities.
Air-cooled condensers operate dry and do not require installation of pump and water piping. These units are also available for industrial fluid cooling. In applications where low noise levels are of critical importance, units with centrifugal fans can also be fabricated. For these and other special applications consult SARAVEL factory for capacity data and unit dimensions.
Reliability and proven performance are incorporated into the following design features:

CASINGS
All casing are constructed of heavy gage galvanized steel sheet panels which are electro statically powder painted and subsequently oven cured at 180°C to provide an even, flexible and durable gray gloss finish as well as excellent corrosion protection. Fan panels have long smooth radius outlet orifices to assure high efficiency and low noise level. The body structure is made of heavy gage galvanized steel and for larger units, structural steel profiles provide maximum rigidity.
Units are provided with lifting eyes and footpads for ease of transport and installation

COILS
Condenser coils consist of 5/8” OD (Outer Diameter) with fin spacing of 10 FPI (Fin per inch). (In exceptional cases they can also built 8, 12, 14 or 16 FPI.)
Additionally, coils contain an integral liquid sub-cooling section to enhance performance and maintain liquid quality.
Tube pattern includes staggered arrangement, providing economical selection for specific duty and application ranges. Standard coils are designed with 5/8” copper tubes with possible alternate material selections of carbon steel and stainless steel (in spiral arrangement) to meet specific application needs.

Fin materials include aluminum and copper.
Coils are designed and tested for 350 psig (24 bar) pressure and evacuated and backfilled with 15 psig (1 bar) nitrogen gas prior to shipment.
Headers are of heavy wall copper or carbon and stainless steel.
All connections are of the sweat type suitable for brazing.

TUBES
Tube pattern includes staggered arrangement, providing economical selections for specific duty and application ranges. Standard coils are designed with 5/8" copper tubes .

FINS
Continuous waffle plate with rippled edge for extra rigidity or corrugated spiral types provide provide optimum air turbulence and fin conformity for maximum heat transfer.

Plate fins are die-formed with self-spacing collars. Tubes are mechanically expanded into fin collars for a permanent bond.

MANIFOLD HEADERS
Headers are of heavy wall copper. All connections are of the sweat type suitable for brazing.

FANS
All fans are recessed below top of unit and have externally (or internally) driven electrical motor.
The high efficiency and low noise fans used in units are covered with fan guards, which are easily removable for cleaning and services.

All the motors are fitted with a thermal protection device of the self-resetting type, to protect the motor from dangerous overheating.

The motors can be speed controlled by variation of the supply voltage with either electronic controllers or transformers.

In other applications, units with centrifugal fans can also be fabricated.

MOTORS
SARAVEL use propeller type fans, ROTOREX IP54 with low noise features of blades for air-cooled condensers.
All direct drive motors have sealed permanently lubricated ball bearing.

CONTROL VALVES
Each condenser circuit is equipped with a service liquid shut-off valve for manual pump down operation, safety valve, and a charging valve.

NOTE: All specifications & dimensions subject to change without notice.

EXAMPLE 1 :
Condenser Selection (Semi-hermetic Compressor)

Given :
Refrigerant ……R-22
Evaporator Capacity (TC)……225.4 MBH
Evaporating Temperature……45
Condensing Temperature … …… 130 ^{o}F
Ambient Air Temperature ……100 ^{o}F
Temperature Difference(TD)……30
Compressor Input KW ……20
Altitude ……940 m
Fin Type …… Aluminum Fin Plate
Fin per inch ……10
Find:
(a) Calculate heat rejection (HR).
(b) Select Condenser.
(c) Recalculate TD.

Solution:
(a) The heat rejection, HR, is given by the following formula:
Heat Rejection= (Ec+CIP)×C1×C2×C3×C4×C5
= (225.4+20× 3.413)× 1×1×1 ×1.07×1
= 315 MBH

(b) From TABLE1 or TABLE2 under Condensing Temperature 130°F , Ambient Air Temperature 100°F(TD=30°F),MODELSAC-250 can sufficiently match the heat rejection calculated in part (a).

(c) To determine actual TD at which unit will operate, divide 315 MBH by the basic rating of 414 MBH and multiply by the given TD:

$$TD_{actual} = TD_{design} \times \frac{\text{Calculated Capacity}}{\text{Rated Capacity}}$$
$$=30\times \frac{315}{414} = 23\ ^{o}F$$

If the compressor input KW is not known, then a heat of compression factor from TABLE8 for suction gas cooled compressors must be applied to the evaporator capacity in the following manner:

From TABLE 6at 45 ^{o}F evaporating temperature and 130 ^{o}F condensing temperature, Result in a compression factor of 1.28. Applying the heat of compression correction factor and the altitude correction factor results in :
Heat Rejection = Ec×C1×C2 ×C3 ×C4×C5×C6
Heat Rejection = 225.4×1×1×1×1.07×1×1.28
= 309 MBH
Unit may be selected as previously outline.

EXAMPLE 2 :
Condenser Selection (Open Compressor)

Given:
SARAVEL air cooled chiller SLCO-90-1A:
Refrigerant……R –22
Evaporator Capacity (TC) …… ..64.1 Tons
Cooler Water Leaving Temperature ……45 ^{o}F
Evaporating Temperature ……40 ^{o}F
Ambient Air Temperature ……100 ^{o}F
Condensing Temperature……. 135 ^{o}F
Altitude …… …… 1250 m
Fin Type …….. …Copper Fin Plate
Fin per inch ……10
Compressor Brake Horse Power ……91.7

Find:
(a) Calculated heat rejection (HR).
(b) Select condenser.
(c) Recalculate TD.
Solution:
(a) To calculate HR the following formula is used:
Heat Rejection= (Ec+CIP)×C1×C2×C3×C4×C5
= (64.1×12 + 91.7×2.545)× 0.97×1×1×1.095×1
= 1065MBH

Note: If compressor BHP is not given, then apply the heat of compression factor from TABLE 7 for open type compressors. In this case by interpolating between 130 and 140 ^{o}F results in 1.26 .
Heat Rejection = Ec×C1×C2×C3×C4×C5×C7
HR= (64.1×12) × 0.97×1×1×1.095×1×1.26
= 1030 MBH

(b) From TABLE1 or TABLE2 under Condensing Temperature 135°F , Ambient Air Temperature 100°F (TD=35°F),MODEL SAC-550 can sufficiently match the heat rejection calculated in part (a).

(d) To determine actual TD at which unit will operate

$$TD = {}_{actual}35\times \frac{1065}{1075} = 34.6\ ^{o}F$$

5 RATINGS

TABLE1. HEAT REJECTION MBH(KW)

Model	TD °F(°C)							
	5(3)	10(6)	15(8)	20(11)	25(14)	30(17)	35(19)	40(22)
SAC-060	14(4)	29(9)	45(13)	62(18)	80(23)	99(29)	118(35)	139(41)
SAC-085	21(6)	44(13)	67(20)	92(27)	118(35)	145(42)	173(51)	201(59)
SAC-120	31(9)	63(18)	95(28)	129(38)	163(48)	198(58)	233(68)	269(79)
SAC-180	45(13)	92(27)	141(41)	192(56)	246(72)	301(88)	358(105)	416(122)
SAC-250	63(18)	129(38)	197(58)	267(78)	340(100)	414(121)	490(144)	567(166)
SAC-350	80(23)	165(48)	257(75)	353(103)	453(133)	558(163)	665(195)	775(227)
SAC-450	109(32)	231(68)	363(106)	504(148)	652(191)	806(236)	964(283)	1126(330)
SAC-550	124(36)	268(79)	409(120)	567(166)	732(214)	901(264)	1075(315)	1252(367)
SAC-700	159(47)	331(97)	513(150)	706(207)	907(266)	1115(327)	1330(390)	1550(454)
SAC-850	189(55)	393(115)	610(179)	839(246)	1077(316)	1322(387)	1573(461)	1829(536)
SAC-1000	231(68)	490(144)	772(226)	1072(314)	1386(406)	1710(501)	2042(599)	2380(698)
SAC-1200	298(87)	623(183)	971(284)	1335(391)	1712(502)	2098(615)	2490(730)	2887(846)

* All ratings are based on ARI 460-87 standard condition at sea level
** ARI standard rating condition:125°F condensing temp. and 95°F entering air temp

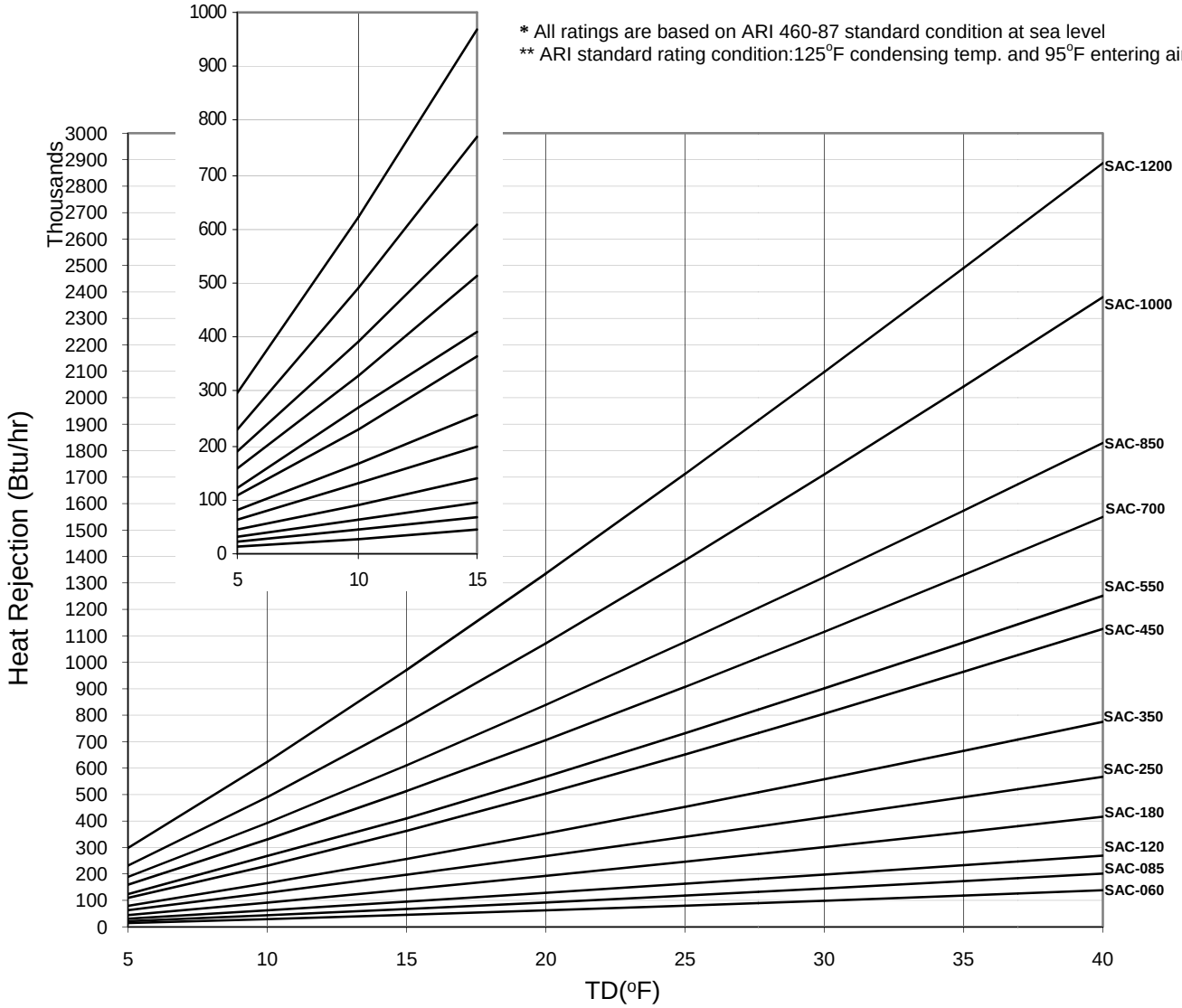

TABLE2. HEAT REJECTION MBH(KW)

Condensing Temp.°F(°C)	Ambient Temperature °F(°C)							
	SAC - 060							
	85(30)	95(35)	100(38)	110(43)	115(46)	120(49)	125(52)	130(54)
90(32)	14(4)							
95(35)	29(9)							
100(38)	45(13)	14(4)						
105(40)	62(18)	29(9)	14(4)					
110(43)	80(23)	45(13)	29(9)					
115(46)	99(29)	62(18)	45(13)	14(4)				
120(49)	118(35)	80(23)	62(18)	29(9)	14(4)			
125(52)	139(41)	99(29)	80(23)	45(13)	29(9)	14(4)		
130(54)		118(35)	99(29)	62(18)	45(13)	29(9)	14(4)	
135(57)		139(41)	118(35)	80(23)	62(18)	45(13)	29(9)	14(4)
140(60)			139(41)	99(29)	80(23)	62(18)	45(13)	29(9)
145(63)				118(35)	99(29)	80(23)	62(18)	45(13)
°F(°C)	SAC - 085							
	85(30)	95(35)	100(38)	110(43)	115(46)	120(49)	125(52)	130(54)
90(32)	21(6)							
95(35)	44(13)							
100(38)	67(20)	21(6)						
105(40)	92(27)	44(13)	21(6)					
110(43)	118(35)	67(20)	44(13)					
115(46)	145(42)	92(27)	67(20)	21(6)				
120(49)	173(51)	118(35)	92(27)	44(13)	21(6)			
125(52)	201(59)	145(42)	118(35)	67(20)	44(13)	21(6)		
130(54)		173(51)	145(42)	92(27)	67(20)	44(13)	21(6)	
135(57)		201(59)	173(51)	118(35)	92(27)	67(20)	44(13)	21(6)
140(60)			201(59)	145(42)	118(35)	92(27)	67(20)	44(13)
145(63)				173(51)	145(42)	118(35)	92(27)	67(20)
°F(°C)	SAC - 120							
	85(30)	95(35)	100(38)	110(43)	115(46)	120(49)	125(52)	130(54)
90(32)	31(9)							
95(35)	63(18)							
100(38)	95(28)	31(9)						
105(40)	129(38)	63(18)	31(9)					
110(43)	163(48)	95(28)	63(18)					
115(46)	198(58)	129(38)	95(28)	31(9)				
120(49)	233(68)	163(48)	129(38)	63(18)	31(9)			
125(52)	269(79)	198(58)	163(48)	95(28)	63(18)	31(9)		
130(54)		233(68)	198(58)	129(38)	95(28)	63(18)	31(9)	
135(57)		269(79)	233(68)	163(48)	129(38)	95(28)	63(18)	31(9)
140(60)			269(79)	198(58)	163(48)	129(38)	95(28)	63(18)
145(63)				233(68)	198(58)	163(48)	129(38)	95(28)

TABLE2(continue). HEAT REJECTION MBH(KW)

Condensing Temp °F (°C)	Ambient Temperature °F(°C)							
	SAC - 180							
	85(30)	95(35)	100(38)	110(43)	115(46)	120(49)	125(52)	130(54)
90(32)	45(13)							
95(35)	92(27)							
100(38)	141(41)	45(13)						
105(40)	192(56)	92(27)	45(13)					
110(43)	246(72)	141(41)	92(27)					
115(46)	301(88)	192(56)	141(41)	45(13)				
120(49)	358(105)	246(72)	192(56)	92(27)	45(13)			
125(52)	416(122)	301(88)	246(72)	141(41)	92(27)	45(13)		
130(54)		358(105)	301(88)	192(56)	141(41)	92(27)	45(13)	
135(57)		416(122)	358(105)	246(72)	192(56)	141(41)	92(27)	45(13)
140(60)			416(122)	301(88)	246(72)	192(56)	141(41)	92(27)
145(63)				358(105)	301(88)	246(72)	192(56)	141(41)
°F(°C)	SAC - 250							
	85(30)	95(35)	100(38)	110(43)	115(46)	120(49)	125(52)	130(54)
90(32)	63(182)							
95(35)	129(38)							
100(38)	197(58)	63(182)						
105(40)	267(78)	129(38)	63(182)					
110(43)	340(100)	197(58)	129(38)					
115(46)	414(121)	267(78)	197(58)	63(182)				
120(49)	490(144)	340(100)	267(78)	129(38)	63(182)			
125(52)	567(166)	414(121)	340(100)	197(58)	129(38)	63(182)		
130(54)		490(144)	414(121)	267(78)	197(58)	129(38)	63(182)	
135(57)		567(166)	490(144)	340(100)	267(78)	197(58)	129(38)	63(182)
140(60)			567(166)	414(121)	340(100)	267(78)	197(58)	129(38)
145(63)				490(144)	414(121)	340(100)	267(78)	197(58)
°F(°C)	SAC - 350							
	85(30)	95(35)	100(38)	110(43)	115(46)	120(49)	125(52)	130(54)
90(32)	80(23)							
95(35)	165(48)							
100(38)	257(75)	80(23)						
105(40)	353(103)	165(48)	80(23)					
110(43)	453(133)	257(75)	165(48)					
115(46)	558(163)	353(103)	257(75)	80(23)				
120(49)	665(195)	453(133)	353(103)	165(48)	80(23)			
125(52)	775(227)	558(163)	453(133)	257(75)	165(48)	80(23)		
130(54)		665(195)	558(163)	353(103)	257(75)	165(48)	80(23)	
135(57)		775(227)	665(195)	453(133)	353(103)	257(75)	165(48)	80(23)
140(60)			775(227)	558(163)	453(133)	353(103)	257(75)	165(48)
145(63)				665(195)	558(163)	453(133)	353(103)	257(75)

TABLE2(continue). HEAT REJECTION MBH(KW)

Condensing Temp °F (°C)	Ambient Temperature °F(°C)							
	SAC - 450							
	85(30)	95(35)	100(38)	110(43)	115(46)	120(49)	125(52)	130(54)
90(32)	109(32)							
95(35)	231(68)							
100(38)	363(106)	109(32)						
105(40)	504(148)	231(68)	109(32)					
110(43)	652(191)	363(106)	231(68)					
115(46)	806(236)	504(148)	363(106)	109(32)				
120(49)	964(283)	652(191)	504(148)	231(68)	109(32)			
125(52)	1126(330)	806(236)	652(191)	363(106)	231(68)	109(32)		
130(54)		964(283)	806(236)	504(148)	363(106)	231(68)	109(32)	
135(57)		1126(330)	964(283)	652(191)	504(148)	363(106)	231(68)	109(32)
140(60)			1126(330)	806(236)	652(191)	504(148)	363(106)	231(68)
145(63)				964(283)	806(236)	652(191)	504(148)	363(106)
°F(°C)	SAC - 550							
	85(30)	95(35)	100(38)	110(43)	115(46)	120(49)	125(52)	130(54)
90(32)	124(36)							
95(35)	268(79)							
100(38)	409(120)	124(36)						
105(40)	567(166)	268(79)	124(36)					
110(43)	732(214)	409(120)	268(79)					
115(46)	901(264)	567(166)	409(120)	124(36)				
120(49)	1075(315)	732(214)	567(166)	268(79)	124(36)			
125(52)	1252(367)	901(264)	732(214)	409(120)	268(79)	124(36)		
130(54)		1075(315)	901(264)	567(166)	409(120)	268(79)	124(36)	
135(57)		1252(367)	1075(315)	732(214)	567(166)	409(120)	268(79)	124(36)
140(60)			1252(367)	901(264)	732(214)	567(166)	409(120)	268(79)
145(63)				1075(315)	901(264)	732(214)	567(166)	409(120)
°F(°C)	SAC - 700							
	85(30)	95(35)	100(38)	110(43)	115(46)	120(49)	125(52)	130(54)
90(32)	159(47)							
95(35)	331(97)							
100(38)	531(150)	159(47)						
105(40)	706(207)	331(97)	159(47)					
110(43)	907(266)	531(150)	331(97)					
115(46)	1115(327)	706(207)	531(150)	159(47)				
120(49)	1330(390)	907(266)	706(207)	331(97)	159(47)			
125(52)	1550(454)	1115(327)	907(266)	531(150)	331(97)	159(47)		
130(54)		1330(390)	1115(327)	706(207)	531(150)	331(97)	159(47)	
135(57)		1550(454)	1330(390)	907(266)	706(207)	531(150)	331(97)	159(47)
140(60)			1550(454)	1115(327)	907(266)	706(207)	531(150)	331(97)
145(63)				1330(390)	1115(327)	907(266)	706(207)	531(150)

TABLE2(continue). HEAT REJECTION MBH(KW)

Condensing Temp °F (°C)	Ambient Temperature °F(°C)							
	SAC - 850							
	85(30)	95(35)	100(38)	110(43)	115(46)	120(49)	125(52)	130(54)
90(32)	189(55)							
95(35)	393(115)							
100(38)	610(179)	189(55)						
105(40)	839(246)	393(115)	189(55)					
110(43)	1077(316)	610(179)	393(115)					
115(46)	1322(387)	839(246)	610(179)	189(55)				
120(49)	1573(461)	1077(316)	839(246)	393(115)	189(55)			
125(52)	1829(536)	1322(387)	1077(316)	610(179)	393(115)	189(55)		
130(54)		1573(461)	1322(387)	839(246)	610(179)	393(115)	189(55)	
135(57)		1829(536)	1573(461)	1077(316)	839(246)	610(179)	393(115)	189(55)
140(60)			1829(536)	1322(387)	1077(316)	839(246)	610(179)	393(115)
145(63)				1573(461)	1322(387)	1077(316)	839(246)	610(179)
°F(°C)	SAC - 1000							
	85(30)	95(35)	100(38)	110(43)	115(46)	120(49)	125(52)	130(54)
90(32)	231(68)							
95(35)	490(144)							
100(38)	772(226)	231(68)						
105(40)	1072(314)	490(144)	231(68)					
110(43)	1386(406)	772(226)	490(144)					
115(46)	1710(501)	1072(314)	772(226)	231(68)				
120(49)	2042(599)	1386(406)	1072(314)	490(144)	231(68)			
125(52)	2380(698)	1710(501)	1386(406)	772(226)	490(144)	231(68)		
130(54)		2042(599)	1710(501)	1072(314)	772(226)	490(144)	231(68)	
135(57)		2380(698)	2042(599)	1386(406)	1072(314)	772(226)	490(144)	231(68)
140(60)			2380(698)	1710(501)	1386(406)	1072(314)	772(226)	490(144)
145(63)				2042(599)	1710(501)	1386(406)	1072(314)	772(226)
°F(°C)	SAC - 1200							
	85(30)	95(35)	100(38)	110(43)	115(46)	120(49)	125(52)	130(54)
90(32)	298(87)							
95(35)	623(183)							
100(38)	971(284)	298(87)						
105(40)	1335(391)	623(183)	298(87)					
110(43)	1712(502)	971(284)	623(183)					
115(46)	2098(615)	1335(391)	971(284)	298(87)				
120(49)	2490(730)	1712(502)	1335(391)	623(183)	298(87)			
125(52)	2887(846)	2098(615)	1712(502)	971(284)	623(183)	298(87)		
130(54)		2490(730)	2098(615)	1335(391)	971(284)	623(183)	298(87)	
135(57)		2887(846)	2490(730)	1712(502)	1335(391)	971(284)	623(183)	298(87)
140(60)			2887(846)	2098(615)	1712(502)	1335(391)	971(284)	623(183)
145(63)				2490(730)	2098(615)	1712(502)	1335(391)	971(284)

CORRECTION FACTORS

TABLE3 : FIN MATERIAL CORRECTION FACTOR (C1)

FIN MATERIAL	ALUMINIUM	COPPER
C1	1	0.97

TABLE4 : FIN PER INCH CORRECTION FACTOR (C2)

FIN PER INCH	8	10	12	14	16
C2	1.12	1	0.93	0.88	0.84

TABLE5 : Refrigerant Correction Factor (C3)

REFRIGERANT	R404A	R22	R407	R502	R134A
C3	0.99	1	1	1.04	1.01

TABLE6 : ALTITUDE CORRECTION FACTOR (C4)

ALTITUDE		C4	ALTITUDE		C4
feet	meters		feet	meters	
0	0	1.000	5500	1720	1.224
500	156	1.018	6000	1875	1.248
1000	315	1.042	6500	2031	1.272
1500	469	1.056	7000	2190	1.295
2000	625	1.075	7500	2344	1.321
2500	781	1.095	8000	2500	1.346
3000	940	1.116	8500	2656	1.372
3500	1094	1.136	9000	2813	1.399
4000	1250	1.157	9500	2970	1.427
4500	1400	1.179	10000	3125	1.472
5000	1560	1.202	10500	3282	1.507

TABLE7 : Coating Correction Factor from BLYGOLD (C5)

C5	1.05

Heat Rejection = (Ec + CIP) × C1 × C2 × C3 × C4 × C5

- C5 → Correction factor from table 7
- C4 → Correction factor from table 6
- C3 → Correction factor from table 5
- C2 → Correction factor from table 4
- C1 → Correction factor from table 3
- CIP → Compressor input power(CIP)
- Ec → Evaporator capacity(Ec)

TABLE8 : SUCTION GAS COOLED COMPRESSORS-HEAT OF COMPRESSION FACTOR (C6)

EVAPORATING TEMP °F(°C)	CONDENSING TEMP °F(°C)					
	90(32)	100(38)	110(43)	120(49)	130(55)	140(60)
+ 50(10)	1.14	1.17	1.20	1.23	1.26	1.29
+ 45(7)	1.16	1.19	1.22	1.25	1.28	1.32
+ 40(4)	1.18	1.21	1.24	1.27	1.31	1.35
+ 30(-1)	1.22	1.25	1.28	1.32	1.37	1.42
+ 20(-6)	1.26	1.29	1.33	1.37	1.43	1.49
+ 10(-12)	1.31	1.34	1.38	1.43	1.49	1.55
+ 0(-18)	1.36	1.40	1.44	1.50	1.56	1.62
- 10(-23)	1.42	1.46	1.50	1.57	1.64	-

TABLE9 : OPEN TYPE COMPRESSORS-HEAT OF COMPRESSION FACTOR (C7)

EVAPORATING TEMP °F(°C)	CONDENSING TEMP(°F)					
	90(32)	100(38)	110(43)	120(49)	130(55)	140(60)
+ 50(10)	1.09	1.12	1.14	1.17	1.20	1.24
+ 45(7)	1.11	1.14	1.16	1.19	1.22	1.26
+ 40(4)	1.12	1.15	1.17	1.20	1.23	1.28
+ 30(-1)	1.14	1.17	1.20	1.24	1.27	1.32
+ 20(-6)	1.17	1.30	1.24	1.28	1.32	1.37
+ 10(-12)	1.21	1.24	1.28	1.32	1.36	1.42
+ 0(-18)	1.24	1.28	1.32	1.37	1.41	1.47
- 10(-23)	1.28	1.32	1.37	1.42	1.47	-

If compressor power input is not given then apply the heat of compression factor from TABLE7 or TABLE8

Heat Rejection = Ec × C1 × C2 × C3 × C4 × C5 × (C6 or C7)

- C6 or C7 → Correction Factor from table 8 or 9
- C5 → Correction factor from TABLE 7
- C4 → Correction factor from table 6
- C3 → Correction factor from table 5
- C2 → Correction factor from table 4
- C1 → Correction factor from table 3
- Ec → Evaporator capacity(Ec)

UNIT LOCATION

SARAVEL air-cooled condensers are designed for outdoor installation. When selecting a site for installation, the following guidelines should be followed:

1. The outdoor location of the unit should have minimum sun exposure and an adequate supply of fresh air without any obstructions.
2. Do not install units beneath windows or between structures where normal operating sounds may be objectionable.
3. Units can be installed either on a roof or on ground level.
4. The condenser fans are of the propeller type, and are selected for free air discharge. If silencers or duct work are placed over the fan discharges, performance factors are available to adjust for the increased external static pressure and sound attention data.

CLEARANCES

The units must be installed with sufficient clearances for air entrance to the condenser, for air discharge away from the condenser, and for servicing access (see FIGURE 1).

At locations where winter operation is intended and snow accumulations are expected, additional clearance from the ground must be provided to insure normal condenser airflow.

See installation details on pages 11 thru 13 for minimum clearance for all units.

FOUNDATION

The unit should be mounted on a flat and level foundation, ground or roof, capable of supporting the entire operating weight of equipment. Operating weights are given in the PHYSICAL DATA section.

Roof Locations – Select a site with adequate structural strength of the unit.
Neoprene type isolators should be incorporated to minimize the transmission of vibration into the building structure.

Ground Level Locations – It is critical that the units will not settle, causing strain on the refrigerant lines and resulting in possible leaks.

The pad should be isolated from the main building foundation to prevent the transmission of vibration.
For ground level installations, precautions should be taken to protect the unit from being tampered or causing injury to unauthorized persons. A fence, wire – mesh guards, or louvered panels, should enclose the units.

REFRIGERANT PIPING

When sizing refrigerant pipe for air cooled condensers in split system air conditioning applications, consideration must be given to the: (1) Suction line pressure drop due to friction, (2) Liquid line pressure drop due to friction, (3) Suction in velocity for oil return, and (4) Liquid line pressure drop due to vertical rise. SARAVEL recommends the following limits for suction, discharge, and liquid lines for R-22 applications corresponding to a change of saturated temperature $T_{suction}$.

	$T_{suction}$ °F	P_{pesia}
Suction Line	2	2.91 at T suction =40 °F
Discharge Line	1	2.91 at Tcond = 105 °F
Liquid Line	1	3.05 at Tcond = 105 °F

Furthermore, for proper return of oil to the compressor crankcase, the refrigerant vapor velocities should be maintained at a minimum of 500 fpm in horizontal lines and 1500 fpm in vertical refrigerant risers.
When the condensing unit is located below the evaporator, the pressure drop due to vertical rise and friction should be held less than 40 psi in order to prevent refrigerant flashing before reaching the thermal expansion valve.

On a system where the evaporator is located below the condensing unit, the suction line must be sized for both pressure drop and oil return.

All horizontal suction lines should be pitched in the direction of the refrigerant flow to aid the return of oil to the compressor. All suction lines with a vertical rise exceeding 6m should have a “P” trap at the bottom and the top to facilitate oil return. Suction lines with a vertical rise exceeding 6.5m should be trapped every 6m to provide drain points for the oil when the circuit is de-activated. When the circuit is re-activated, oil will return to the compressor more quickly and in smaller slugs.

13 PHYSICAL & ELECTRICAL DATA

TABLE10 : PHYSICAL DATA

MODEL	PROPELLER FAN PERFORMANCE				COIL			REFRIGERANT CAPACITY R-22 (Kg)		CIRCUTING DESIGNATION
	NO.	DIAMETER(INCH)	RPM	CFM	NO.	ROWS DEEP	FACE AREA (Ft^2)	CHARGE	PUMP DOWN	
SAC-060	1	30	900	7200	1	3	7	5	11	S
SAC-085	1	30	900	7800	1	3	12	8	18	S
SAC-120	1	30	900	8100	2	3	24	15	36	S
SAC-180	2	30	900	14400	2	3	28	18	41	S,R
SAC-250	2	30	900	16800	2	3	48	28	66	S,R
SAC-350	4	30	900	27000	2	3	48	28	66	S,R
SAC-450	6	30	900	40500	2	3	60	34	82	S,R
SAC-550	6	30	900	41400	2	3	73	44	104	S,R
SAC-700	8	30	900	54000	4	3	96	56	132	S,R
SAC-850	8	30	900	58800	4	3	120	68	164	S,R
SAC-1000	12	30	900	90000	4	3	145	88	208	S,R
SAC-1200	12	30	900	81000	4	4	145	112	272	S,R

TABLE11 : ELECTRICAL DATA

MODEL	ELECTRIC MOTOR					UNIT		
	NO.	HP	RPM	FULL LOAD AMPS	STARTING AMPS	FULL LOAD AMPS	STARTING AMPS	WIRE SIZING AMPS
SAC-060	1	1.1	900	1.86	5.4	1.86	5.4	2.5
SAC-085	1	1.1	900	1.86	5.4	1.86	5.4	2.5
SAC-120	1	1.1	900	1.86	5.4	1.86	5.4	2.5
SAC-180	2	1.1	900	1.86	5.4	3.72	10.8	6
SAC-250	2	1.1	900	1.86	5.4	3.72	10.8	6
SAC-350	4	1.1	900	1.86	5.4	7.44	21.6	10
SAC-450	6	1.1	900	1.86	5.4	1.16	32.4	16
SAC-550	6	1.1	900	1.86	5.4	11.16	32.4	16
SAC-700	8	1.1	900	1.86	5.4	14.88	43.2	16
SAC-850	8	1.1	900	1.86	5.4	14.88	43.2	16
SAC-1000	12	1.1	900	1.86	5.4	22.32	64.8	25
SAC-1200	12	1.1	900	1.86	5.4	22.32	64.8	25

SOUND RATING & WEIGHT

TABLE12 : SOUND RATING

MODEL	SAC-060	SAC-085	SAC-120	SAC-180	SAC-250	SAC-350	SAC-450	SAC-550	SAC-700	SAC-850	SAC-1000	SAC-1200
Sound Ratings (db)	70	70	70	73	73	76.5	76.5	77.5	77.5	77.5	77.5	77.5

TABLE13 : SOUND RATING CORRECTION FACTOR

SOUND RATINGS CORRECTION FACTOR					
Distance from condenser		**CF**	**Distance from condenser**		**CF**
meter	feet		meter	feet	
5	16.5	11.5	30	98	27
6	20	13	40	131	29.5
8	26	15.5	50	164	31
10	33	17.5	60	196	33
15	49	21	70	230	34.5
20	65	23.5	80	262	35.5

TABLE14 : CONDENSER APPROXIMATE WEIGHTS (Kg)

CONDENSER APPROXIMATE WEIGHTS (Kg)						
MODEL	**Coil Type**					
	AL			**CU**		
	Fin Per Inch			**Fin Per Inch**		
	8	**10**	**14**	**8**	**10**	**14**
SAC-060	159	162	167	183	191	208
SAC-085	207	213	221	248	263	291
SAC-120	274	286	302	356	386	421
SAC-180	634	646	666	628	762	830
SAC-250	838	856	890	996	1052	1166
SAC-350	872	890	924	1030	1086	1200
SAC-450	1008	1030	1072	1206	1276	1420
SAC-550	1174	1173	1225	1387	1475	1643
SAC-700	1625	1661	1729	1941	2053	2281
SAC-850	1940	1984	2068	2336	2476	2764
SAC-1000	2262	2314	2418	2742	2918	3254
SAC-1200	2490	2562	2698	3130	3418	3818

CONNECTION SIZE

TABLE15 : CONDENCER COPPER PIPE CONNECTION SIZE(inch)

MODEL	CIRCUIT DESIGNATION			
	S		R	
	HOT GAS	LIQUID	HOT GAS	LIQUID
SAC-060	7/8"	7/8"	-----	-----
SAC-085	7/8"	7/8"	-----	-----
SAC-120	1 1/8"	1 1/8"	7/8"	7/8"
SAC-180	1 3/8"	1 3/8"	7/8"	7/8"
SAC-250	1 5/8"	1 3/8"	1 1/8"	1 1/8"
SAC-350	1 5/8"	1 5/8"	1 3/8"	1 3/8"
SAC-450	2 1/8"	2 1/8"	1 5/8"	1 3/8"
SAC-550	2 1/8"	2 1/8"	1 5/8"	1 3/8"
SAC-700	2 1/8"	2 5/8"	1 5/8"	1 5/8"
SAC-850	2 5/8"	2 5/8"	2 1/8"	2 1/8"
SAC-1000	2 5/8"	2 5/8"	2 1/8"	2 1/8"
SAC-1200	2 5/8"	3 1/8"	2 1/8"	2 1/8"

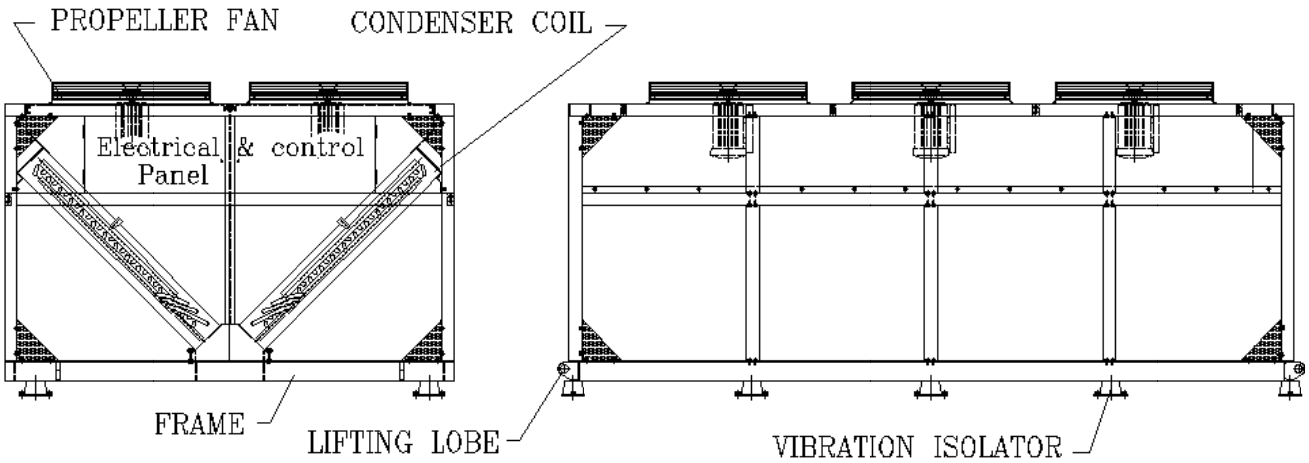

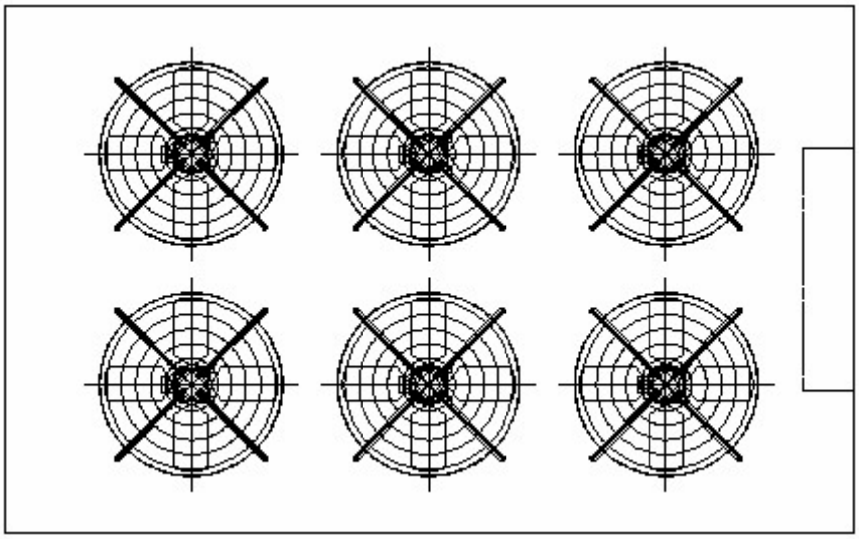

SAC-60 ~ SAC180

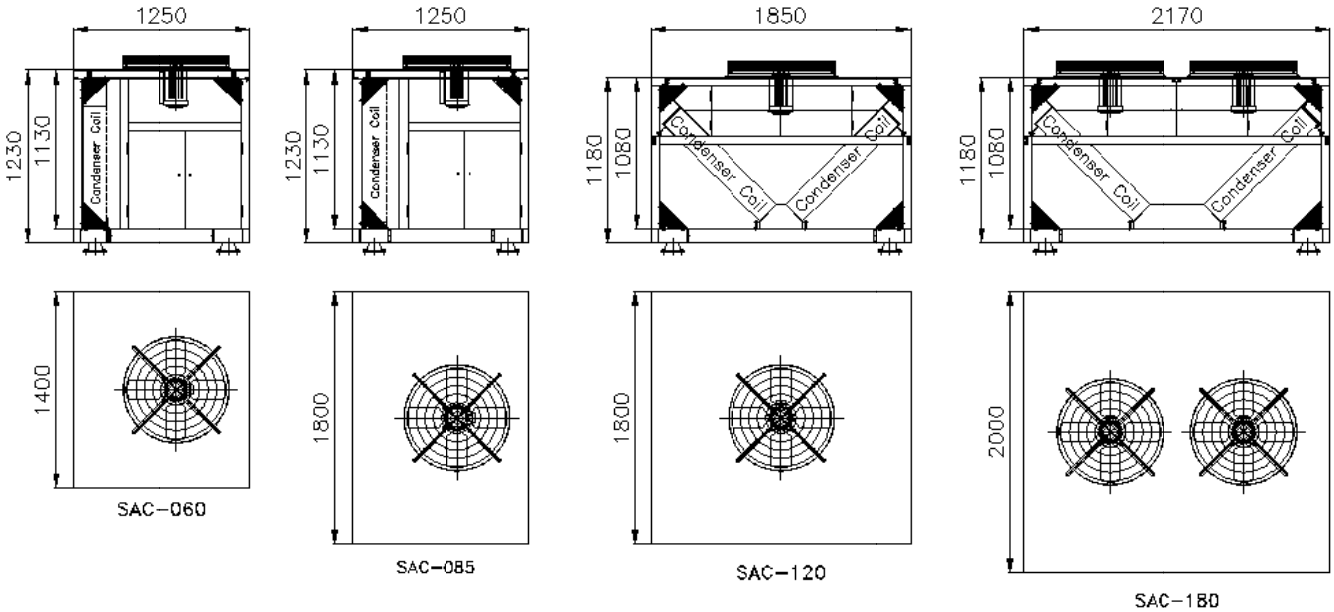

SAC-250 ~ SAC550

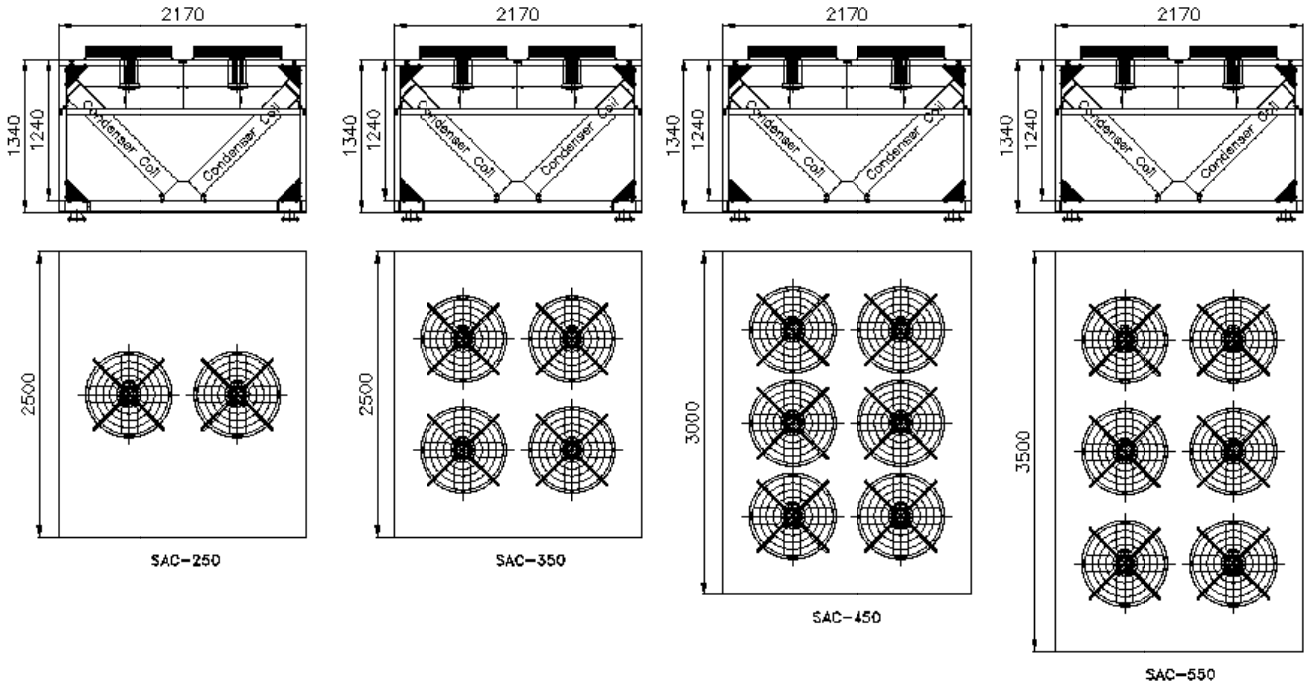

SAC-700 ~ SAC850

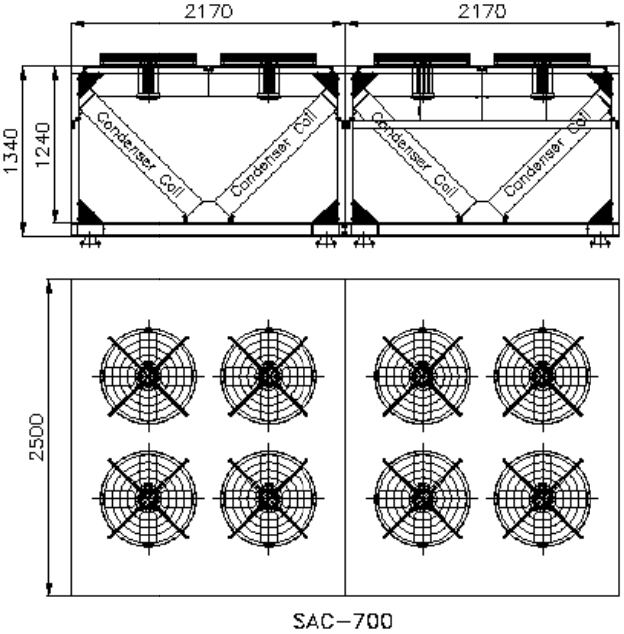

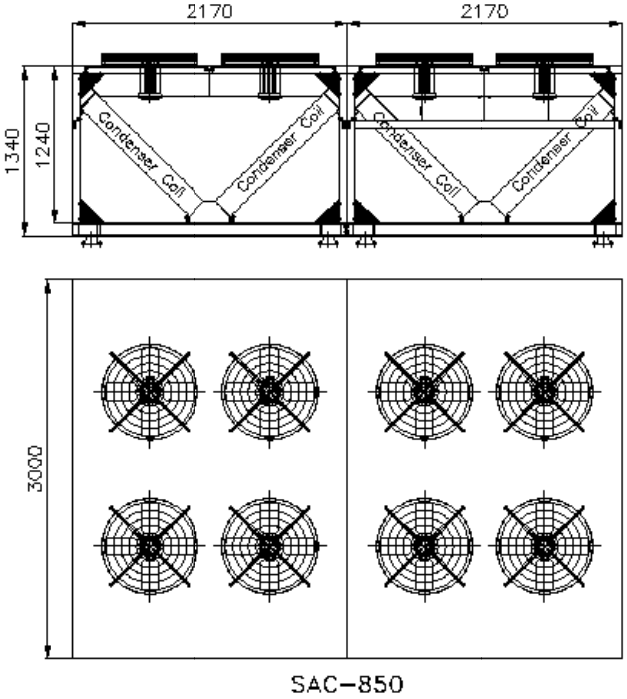

SAC-1000 ~ SAC1200

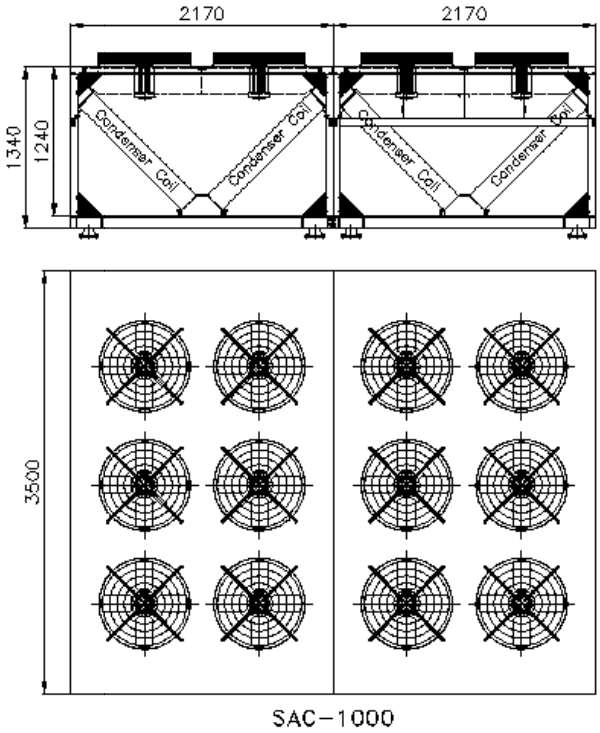

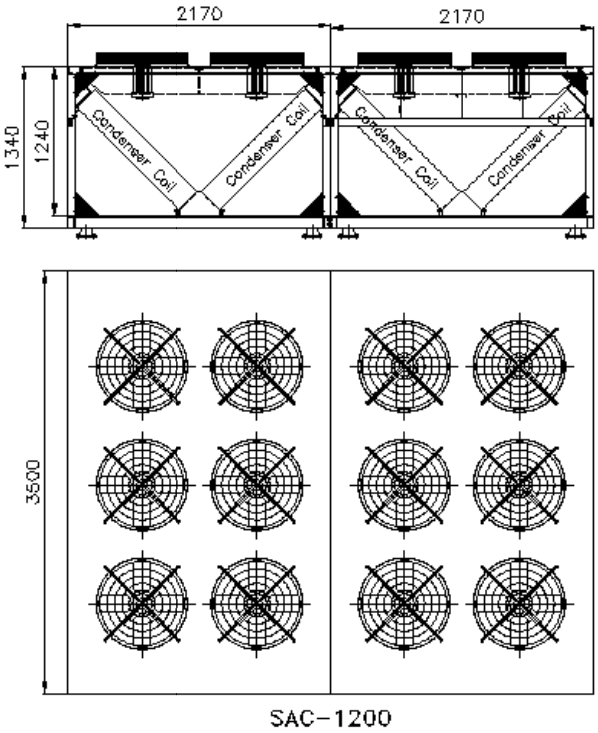

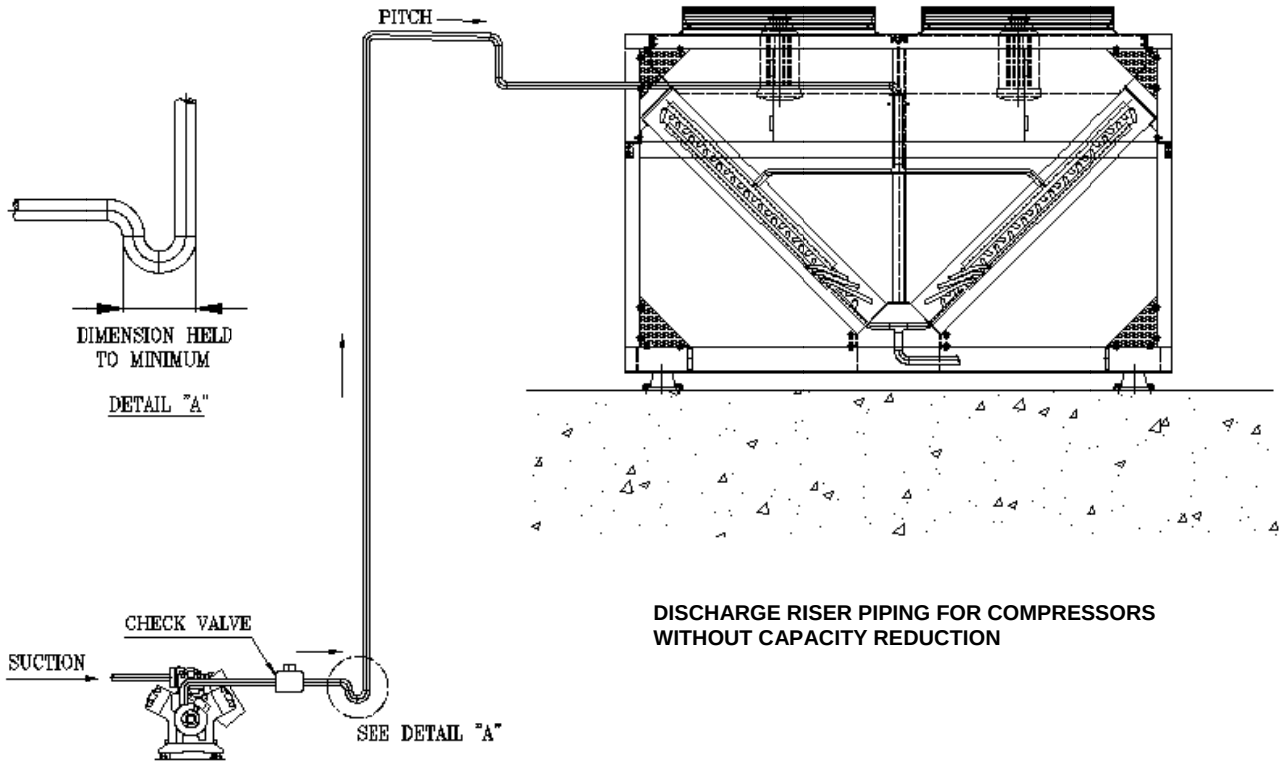

DISCHARGE RISER PIPING FOR COMPRESSORS WITHOUT CAPACITY REDUCTION

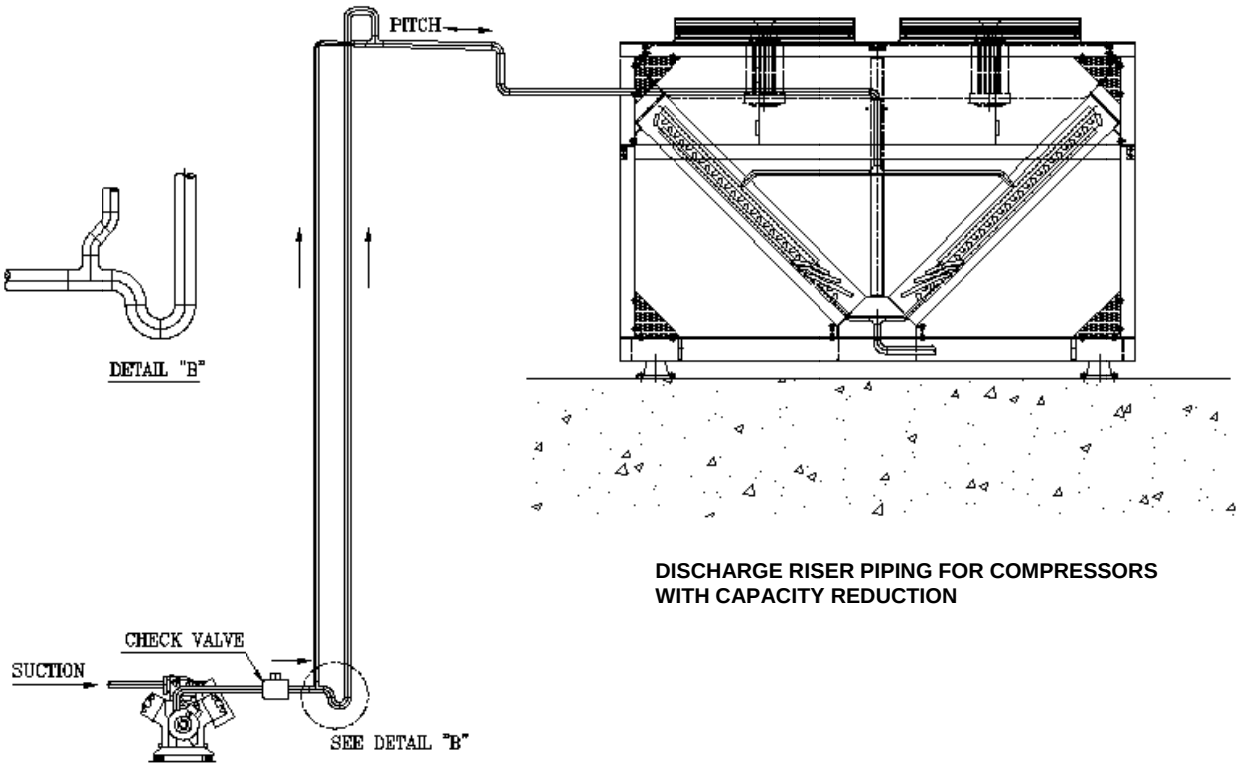

DISCHARGE RISER PIPING FOR COMPRESSORS WITH CAPACITY REDUCTION

NOTES:

1- When vertical lift exceeds 6.5 meters, insert oil traps at every 6 meters.
2- If multiple compressors are utilized whit a single evaporator, a discharge check valve must be utilized.
3- “Over Traps” on top of risers must not be less than 150 mm.

SPACE AND LOCATION REQUIREMENTS

The most important consideration when selecting the location of air cooled condensers is the provision for a supply of ambient air to the condenser, and removal of the heated air from the condenser coils for this purpose *SARAVEL* recommends the minimum space requirements illustrated below. Failure to adhere to these requirements will result in higher condensing temperature which can cause unsafe operation of the condenser and the possible Failure of the compressor. Units must not be located in the vicinity of steam, hot air, of fume exhausts. Another important consideration is that the unit should be mounted away from noise sensitive spaces and must have adequate support to prevent vibration and noise transmission into the building .Units can be installed over corridors, utility areas, rest rooms and other auxiliary areas where high levels of sound are not an important factor.

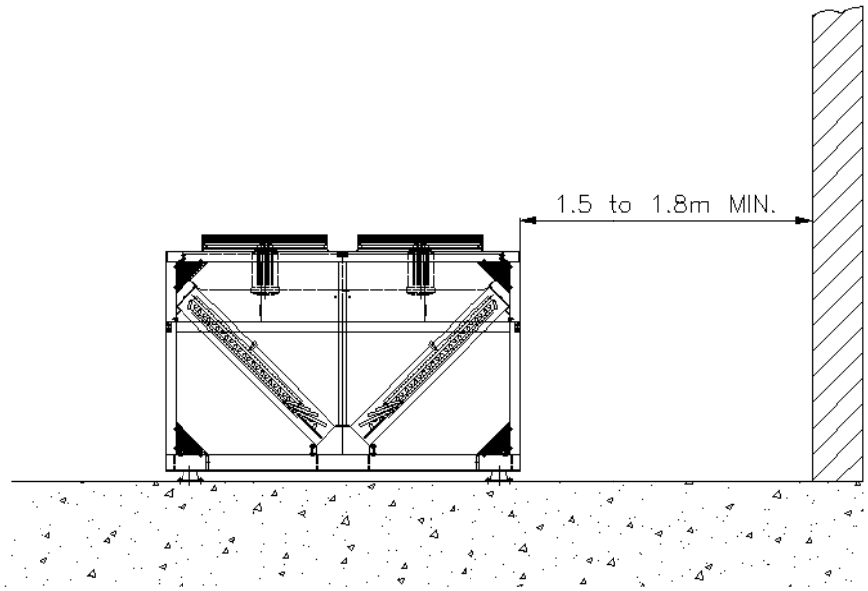

WALLS OR OBSTRUCTIONS

Units should be located so that air may circulate freely and not be re circulated. For proper air flow and access all sides of the units must be a minimum of 1.5 meters away from any wall or obstructions it is preferred that this distance be longer whenever possible . Sufficient room should be left for maintenance work through access doors and panels. Overhead obstructions are not permitted.

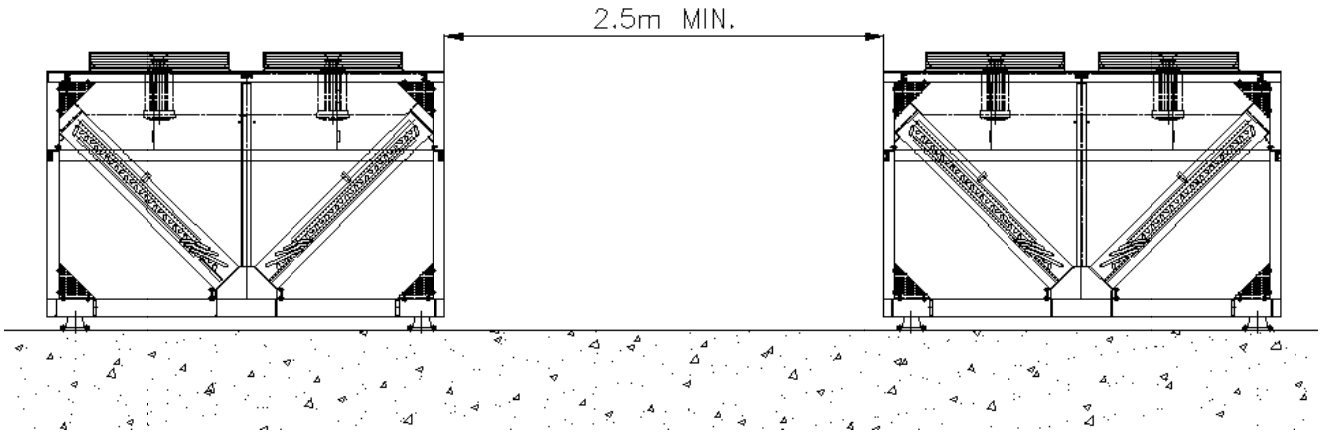

For units placed side by side, the minimum distance between units is 2.5 m. if units are placed end to end, the minimum distance between units is 2.5 meters.

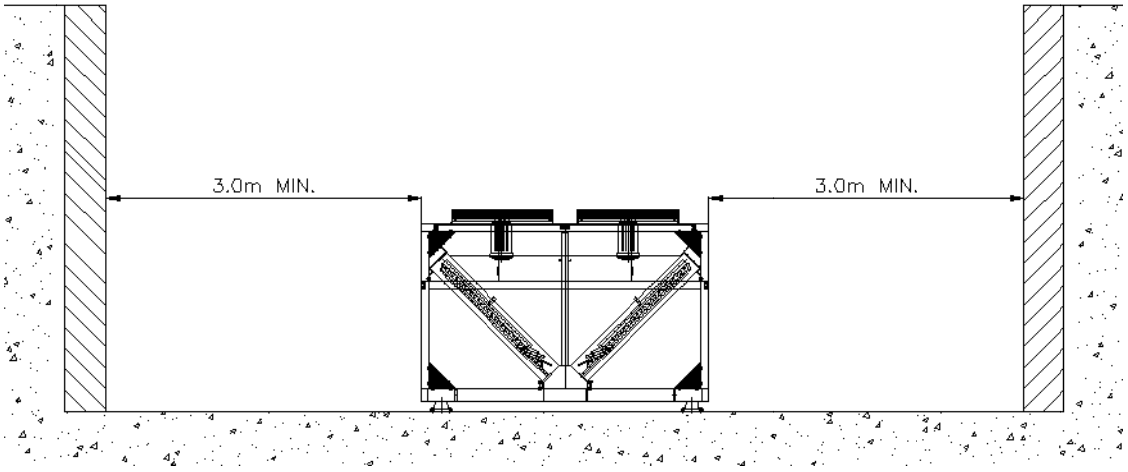

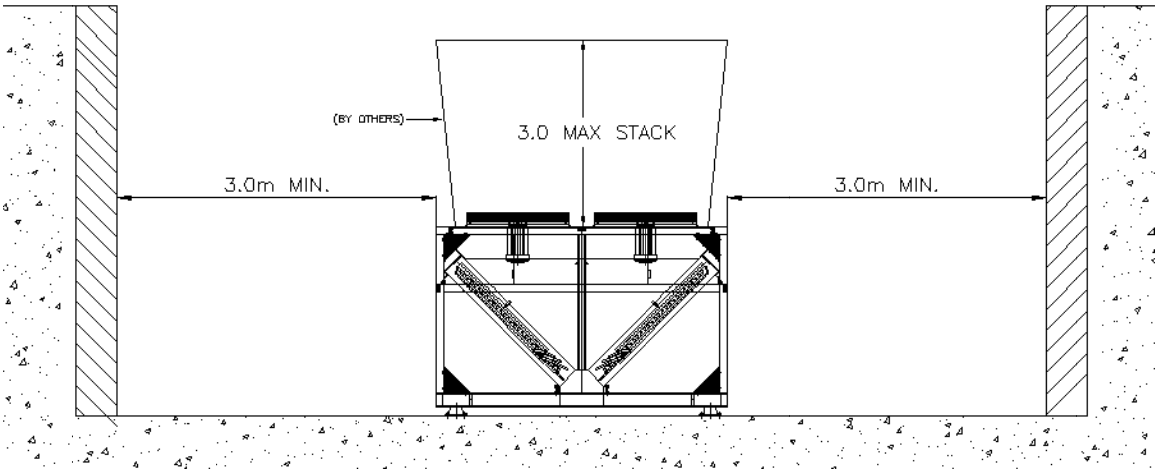

UNITS IN PITS

The top of the unit should be level with the top of the pit , and side distance increased to 3 meter. If the top of the unit is not level with the top of the pit discharge Cones or stacks must be used to raise discharge air to the top of the pit.

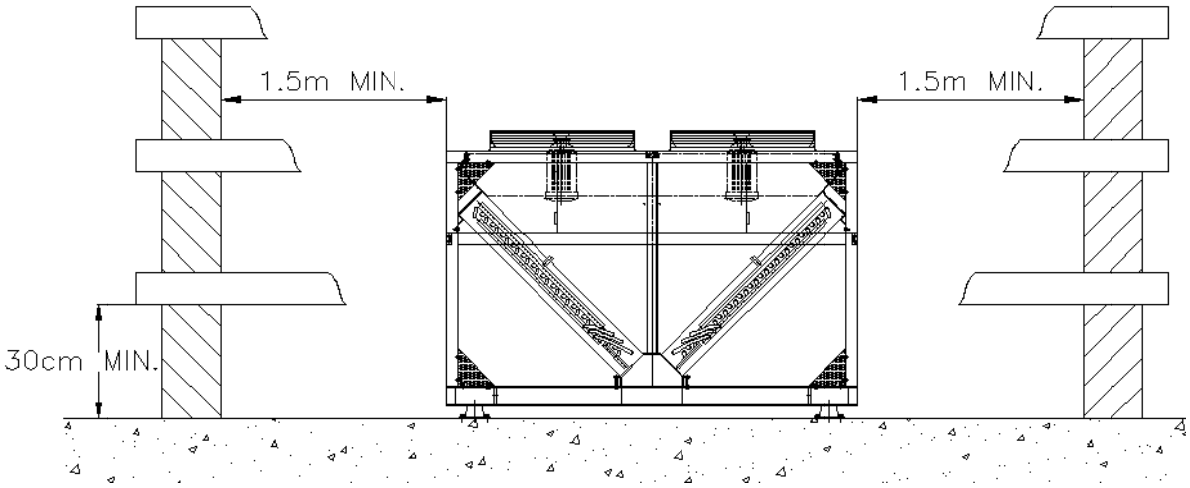

FENCES & LOUVERS

Fences must have 50% free area , with a 30cm under cut and 1.5m minimum clearance , and it must not exceed the top of units.

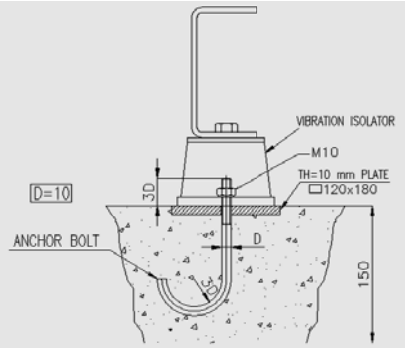

Installation on concrete slab

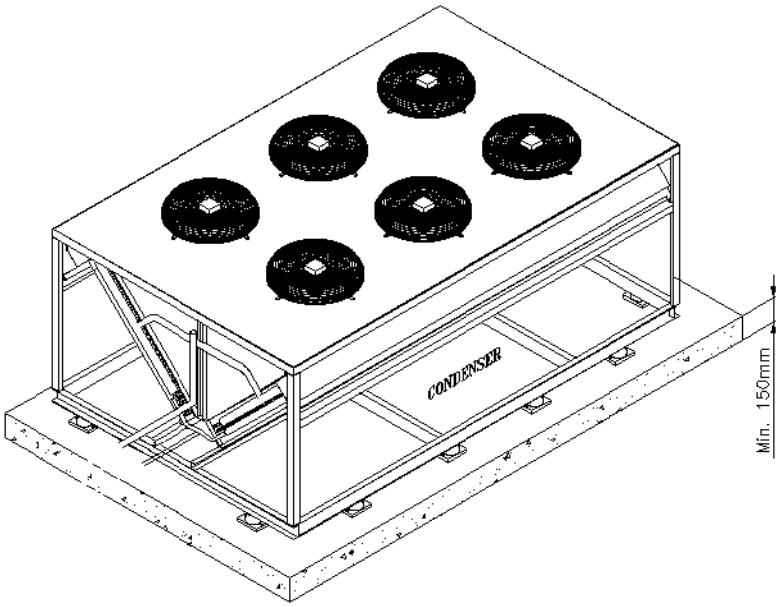

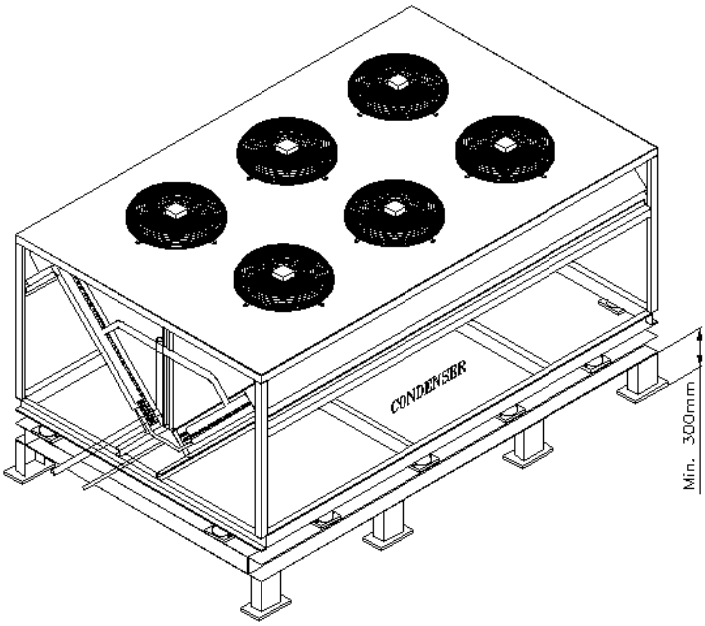

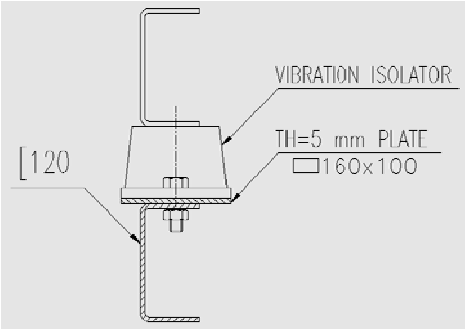

Installation on steel made chassis

If unit installed in high temperature environment, (T_{surf}>65°c) it is recommended to cover the unit with a sun light protector shield.

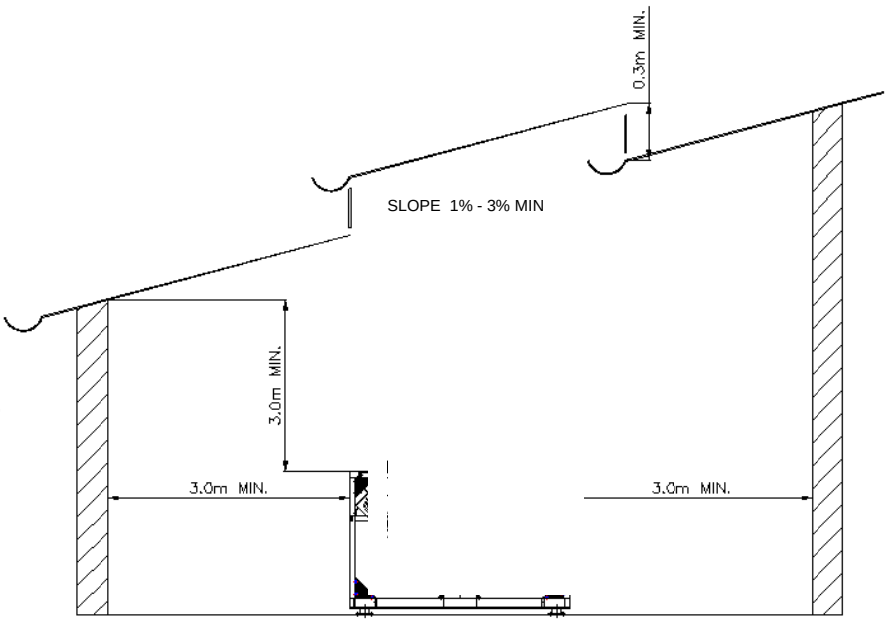

GENERAL
Furnish and install SARAVEL Remote Air Cooled Condenser unit(s) based on the given schedule and as shown on the plan drawings.

Each condenser shall consist of casing, condenser coil, and direct driven propeller fan(s) driven by independent fan motor(s), approved fan guard and mounting legs. All fan motors shall be factory wired to a common electrical control box.

CASINGS
Te enclosure shall be of heavy gage galvanized steel sheet panels, cleaned with enamel paint.

CONDENSER COIL
All condenser coils shall be 5/8" O.D. seamless copper tubing. The tubs shall be mechanically expanded into full fin-tube contact. Fins shall be (Aluminum) (Copper)/(Plate) (Spiral) with die formed corrugations for optimum heat transfer capability. Each condenser shall be constructed to provide sub cooling of the liquid refrigerant.

All headers and connections shall be seamless heavy wall copper tubing; they shall be sized and located for minimum pressure drop and equalized coil distribution. All coils shall be leak tested at 350 psig in an illuminated water test tank in accordance with ANSI/ASHREA15 Safety Code for Mechanical refrigeration. All coils shall be evacuated and filled with nitrogen gas at 15 psig prior to shipment. The condenser shall be equipped with a safety valve mounted on the receiver shell.

FANS
Fans shall be of the propeller type made of galvanized sheet metal directly driven by the electric motor. A fan guard shall cover all recessed fans. All fan guards shall have spacing between heavy gage steel wires corresponding to Standard safety practices. All multiple fan condensers shall be supplied with full width separation baffles to prevent air bypass.

FAN MOTOR
Motors are operated at 950 or 1450 rpm suitable for 380 volts.3 phase and 50-cycle operation.

ELECTRICAL PANEL
All motors shall be factory wired in a raceway to a terminal strip located in drip-proof electrical panel. Starter panel shall include factory wired fan motor contactors, three phase motor thermal overload relays equipped with reset.

CONTROLS
All units shall be provided with head pressure controls, which sequence fan motors in response to coil condensing pressure and temperature.

INSTALLATION
All units shall be provided with heavy gage lifting eyes. They shall be located on the base frame for ease of rigging and installation.

OPTIONAL FEATURES
The following items are offered as optional equipment:

1. Condenser coils made of copper fins with copper tube
2. Sheet metal aluminum enclosures.
3. Centrifugal fans for low sound power level and indoor installations,
4. The choice of the following schemes for low ambient temperature (below 40 ^{o}F):

a - Face dampers with control package.

b- Electrical heating element and insulated receiver, thermostatically controlled to maintain proper condenser pressure.

5. IP55 motors are available for special needs.
6. The material of propellers could be chooses from AL&GI by the customers.
7. For condenser with a receiver, condenser is installed on legs to have enough space for receiver installation.
8. All stainless steel construction.
9. Bly gold coil are also available

SARAVEL CORP.

August. 2009

Manufacturer reserves the right to make changes in design and construction, without notice.

(Head Office)
No. 43, North Sheikh Bahai Avenue, Tehran 19917 , IRAN
Tel: (+98-21) 88046921 (6 lines) Fax: (+98-21) 88046920
E-Mail: sales@saravel.com
Site: http://www.Saravel.com